ALL DIMENSIONS IN MILLIMETRES
REMOVE ALL SHARP EDGES

DO NOT JOIN MATERIAL TOGETHER
TO MAKE INDIVIDUAL ITEMS

THIRD ANGLE PROJECTION
DO NOT SCALE DRAWING

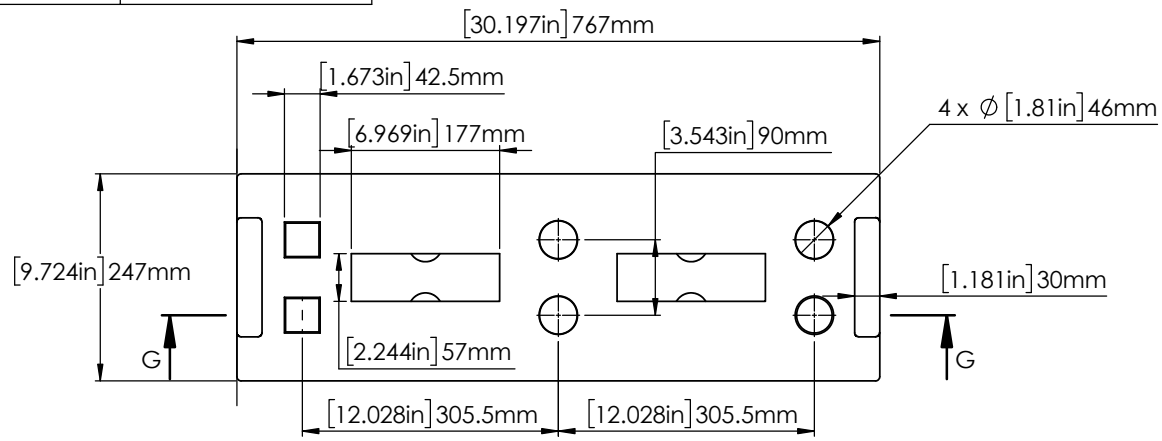

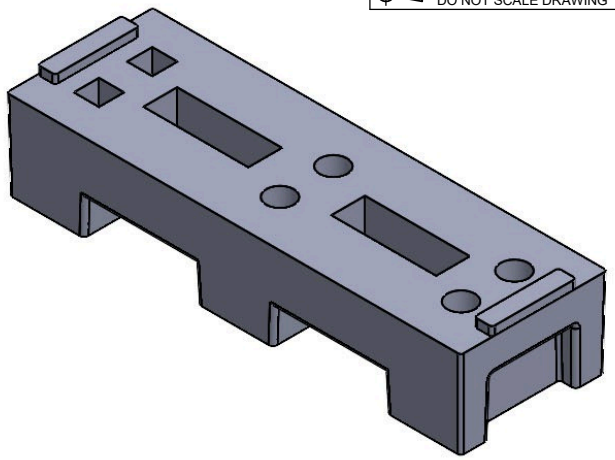

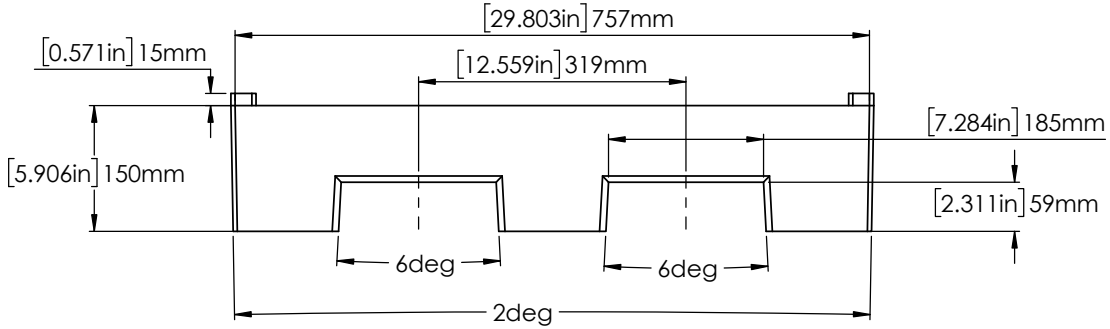

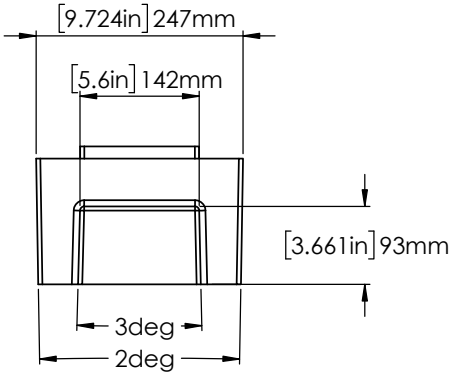

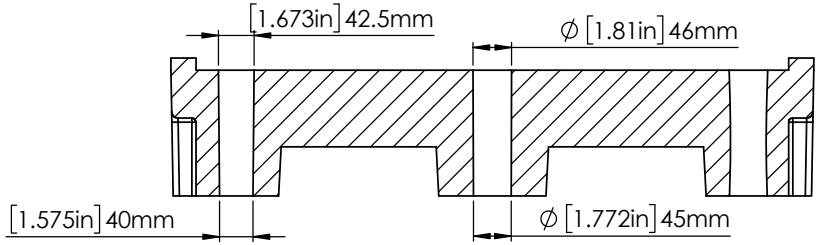

SECTION G-G
SCALE 1 : 6

REV	DATE	DESCRIPTION	DRN	CHKD	APPR
01	8/18/2026	ISSUED FOR APPROVAL	MV	.	.
00	4/27/2026	ISSUED FOR APPROVAL	MV	.	.

TOLERANCES - UNLESS STATED OTHERWISE		
FABRICATION	UP TO 300mm	+/- 1mm
	UP TO 1000mm	+/- 2mm
	1001mm & ABOVE	+/- 3mm
	ANGULAR	+/- 1 °
MACHINING	+/- 0.2mm	
TUBE GAUGE	T≤1.5 = +/- 0.15mm	
	T>1.5 = +/- 0.1T or +/- 0.35mm WHICHEVER IS THE SMALLER	
SHEET GAUGE	+/- 10%	
WEIGHT	+/- 10% (DUE TO MATERIAL PROPERTIES & TOLERANCES)	

TITLE:
FENCE BLOCK FOR EL PANEL

	NAME	SIGNATURE	DATE
DRAWN	MV		4/27/2026
CHK'D	.		.

FINISH:
NONE

MATERIAL:
RECYCLED MIXED PLASTICS

Barrier HQ

Drw / Stockcode No.
12551130

Revision
01

WEIGHT: 39.68 Lbs (18.00 Kg)

SCALE: 1:5

SHEET 1 OF 1

A3

THE COMPANY RETAIN THE RIGHT TO PERIODICALLY ALTER INFORMATION WITHIN THIS DRAWING SHEET AND WILL ATTEMPT TO NOTIFY ALL PARTIES CONCERNED OF ANY CHANGES AND THE INFORMATION ON THIS SHEET SHOULD NOT BE REPRODUCED WITHOUT THIER WRITTEN CONSENT.